NASA TECHNICAL NOTE

NASA TN D-2679

c. 1

LOAN COPY: R
AFWL (W
KIRTLAND AF
0079749
TECH LIBRARY KAFB, NM

NASA TN D-2679

EXPERIMENTAL STUDY UNDER GROUND-HOLD CONDITIONS OF SEVERAL INSULATION SYSTEMS FOR LIQUID-HYDROGEN FUEL TANKS OF LAUNCH VEHICLES

by Porter J. Perkins, Jr.

Lewis Research Center
Cleveland, Ohio

NATIONAL AERONAUTICS AND SPACE ADMINISTRATION • WASHINGTON, D. C. • MARCH 1965

TECH LIBRARY KAFB, NM

0079749

EXPERIMENTAL STUDY UNDER GROUND-HOLD CONDITIONS OF SEVERAL INSULATION SYSTEMS FOR LIQUID-HYDROGEN FUEL TANKS OF LAUNCH VEHICLES

By Porter J. Perkins, Jr.

Lewis Research Center
Cleveland, Ohio

NATIONAL AERONAUTICS AND SPACE ADMINISTRATION

For sale by the Office of Technical Services, Department of Commerce,
Washington, D.C. 20230 -- Price $1.00

EXPERIMENTAL STUDY UNDER GROUND-HOLD CONDITIONS OF SEVERAL INSULATION SYSTEMS FOR LIQUID-HYDROGEN FUEL TANKS OF LAUNCH VEHICLES

by Porter J. Perkins, Jr.

Lewis Research Center

SUMMARY

Three proposed insulation systems that may be applied externally to the liquid-hydrogen fuel tank of launch vehicles were investigated under ground-hold conditions to determine the application feasibility to flight-weight tanks. Experimental data were obtained on the thermal performance of an uninsulated tank and of tanks with three different insulation systems. These were (1) sealed corkboard bonded to the tank, (2) sealed and evacuated polyurethane foam held in place on the tank with a constrictive wrap of prestressed nylon strands, and (3) sealed and evacuated polyurethane foam with a film of liquid nitrogen sprayed on the external surface.

Boiloff rates and overall coefficient of heat transmission for an uninsulated aluminum propellant tank were determined under ambient atmospheric conditions. The insulation effect of a layer of ice and frost on the bare tank was also measured.

The sealed and evacuated polyurethane foam held in place on the tank with a constrictive wrap proved to be the best insulation system, producing a low unit weight (0.26 lb/sq ft) and low apparent thermal conductivity (0.1 (Btu)(in.)/(hr)(sq ft)($^{\circ}$R)). The use of a sprayed-on film of liquid nitrogen over the foam insulation resulted in very low heat inflow rates of 30 Btu/(hr)(sq ft) compared with 156 Btu/(hr)(sq ft) for sealed polyurethane foam.

INTRODUCTION

Liquid hydrogen as a high-energy rocket propellant for upper stages of launch vehicles requires thermal protection on the fuel tank. The extremely low boiling temperature of liquid hydrogen and the relatively high ratio of wetted tank surface to weight of liquid cause high evaporation rates from unprotected tanks. The resulting increase in tank pressure and boiloff losses can be limited to acceptable values during ground hold on the launch pad and boost through the atmosphere if adequate insulation is provided on the fuel tank.

As tank insulation imposes a payload weight penalty to the launch vehicle, however, a careful choice of insulating materials and effectiveness must be made. The insulation as applied to the tank must not only provide the necessary thermal protection, but must also be capable of withstanding the launch conditions, such as aerodynamic loads and heating. These required properties must be achieved with the lowest possible weight, which can be obtained through the use of materials of low density and low thermal conductivity. Insulation on the external walls of liquid-hydrogen tanks has the further requirement that it be protected against air penetrating the material. The external walls of the fuel tank, being below the condensation temperature of air, produce a cryopumping process that can pull additional air through the material to liquefy near the cold walls. The presence of liquid air in insulating material has the effect of raising the thermal conductivity and can structurally damage the insulation as well. Air can be excluded from the insulation by a hermetic seal or by a purge of the condensation region with a noncondensable gas such as helium at a slight positive pressure.

No one insulation or design approach appears applicable for all upper-stage vehicles. Many factors must be considered in the choice of insulating materials and the design of an insulation system. Other factors to be considered are engineering judgement as to reliability of the system, liquid-oxygen compatibility of materials, and ease of fabrication. In some launch profiles, particularly for a final stage, considerable increase in payload weight capability can be obtained by jettisoning the insulation immediately after the period of aerodynamic heating, when it is no longer needed.

Several insulation materials have been considered for the upper stages of boost vehicles. Low density and low thermal conductivity can generally be obtained with the rigid polyurethane foams. This material, however, must be sealed or purged and for some applications must be reinforced and protected with fiber glass or other materials. The use of corkboard and balsa wood have also been considered and, although heavier than foam, these materials can withstand high temperatures on the outside surface, where aerodynamic heating can exceed the upper temperature limit for foam. These materials and others, along with several systems that are applied either externally or internally to the tank wall, have been proposed, and to some extent evaluated, for liquid-hydrogen booster tanks (ref. 1).

The investigation reported herein was conducted to determine experimentally the feasibility and thermal performance of three insulation systems not developed previously for launch vehicles that could be applied externally to liquid-hydrogen propellant tanks. The three types of insulation systems investigated were (1) sealed corkboard bonded to the tank, (2) sealed and evacuated polyurethane foam held in place on the tank with a constrictive wrap of prestressed nylon strands, and (3) sealed and evacuated polyurethane foam with a liquid-nitrogen film sprayed on the external surface. This third system was an attempt to achieve very small heat inflows to the liquid-hydrogen tank. An uninsulated liquid-hydrogen tank, with and without a natural accumulation of ice and frost, was also included in the investigation to determine the magnitude of boiloff compared with insulated tanks. Flight-weight propellant tanks constructed of aluminum alloy were used in the studies, which were conducted at the Plum Brook Station of the Lewis Research Center.

This report presents descriptions, application techniques, and structural performance during ground hold of the three proposed insulation systems. Thermal performance of the installed insulation systems, as well as that of the uninsulated tank, is also presented for the ground-hold condition.

INSULATION SYSTEMS DESIGN

Low insulation weight is generally desirable for rocket booster application. This can be achieved by a low-density, low-thermal-conductivity insulation. A low density-conductivity ρK product therefore becomes a desirable insulation material parameter. On this basis the corkboard used herein ($\rho K = 8.6$) does not appear as attractive as foam, which has lower density and lower thermal conductivity ($\rho K = 0.2$). Corkboard may be considered, however, for application where prolonged periods of high surface temperatures ($>300^{\circ}$ F) can be expected from aerodynamic heating, since corkboard exhibits much better high-temperature properties than foam does.

The concept of a sealed and constrictively wrapped polyurethane foam insulation tested and described herein was directed toward a minimum weight external and fixed system (not jettisonable). It is believed to be a new approach to the application of low-density foam and to the method of attachment of the insulation to the liquid-hydrogen fuel tank. A flight application of the sealed-foam insulation would require a heat-protective cover against aerodynamic heating over the foam if surface temperatures exceeded 300° F during launch. A material for such a cover was not determined in this study since only the ground-hold condition, where a heat shield is not needed, was investigated.

A very small heat inflow to the liquid hydrogen in the fuel tank on the launch pad can be achieved by (1) a vacuum jacket around the tank or by (2) a low outside surface temperature produced by using a shield of liquid nitrogen on conventional flight-type insulations. The vacuum jacket is usually too heavy to be carried aloft and therefore must be quickly separated from the rocket tank only seconds before launch. Several clamshell designs have been proposed for this insulating concept (ref. 2). A somewhat simpler design can be obtained by using a shield of liquid nitrogen. This shield need only be in the form of a thin film produced by a spray of liquid nitrogen over the outside surfaces. The liquid-nitrogen insulation system described herein was intended to demonstrate only in a gross way the effectiveness of this concept. No attempt was made to design a practical spray system for a launch application.

Propellant Tanks Used for Insulation Tests

Two propellant tanks, each with a 32-inch diameter and a wall thickness of 0.082 inch (approaching flight weight for relatively small pressurized systems), were used for the insulation studies reported herein. These tanks were considered sufficiently large for thermal studies but generally not of adequate size for study of many full-scale fabrication problems. Aluminum alloy 2014 T-6 was used throughout the tank structures. Tank 1 (fig. 1) incorporated three separate compartments, with liquid hydrogen stored in the bottom compartment, liquid oxygen normally stored in the top compartment, and a heavy-walled sphere for

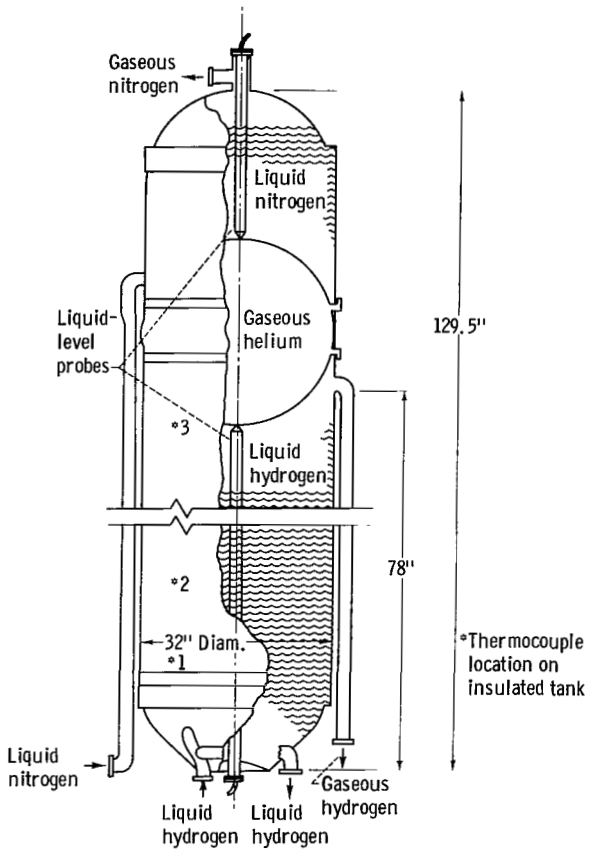

Figure 1. - Flight-weight propellant tank 1 used for corkboard insulated and uninsulated tank studies.

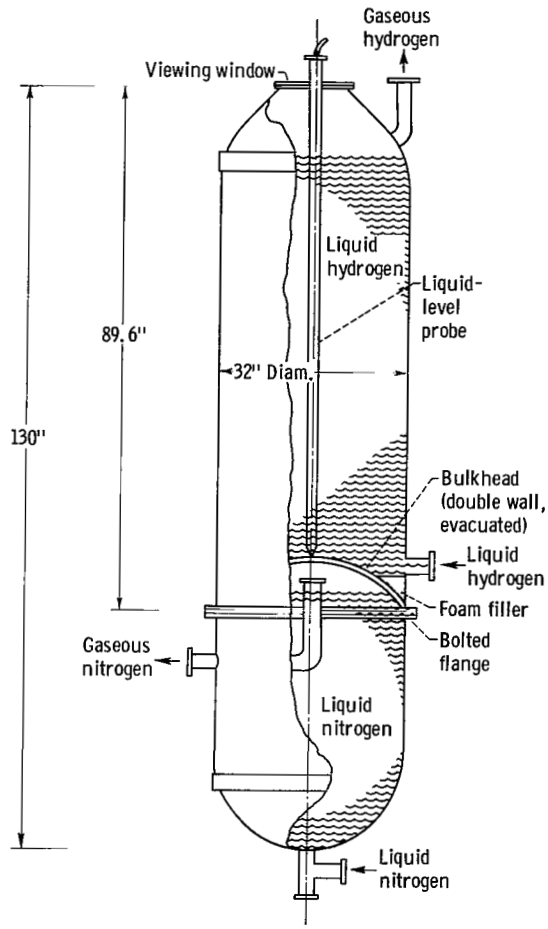

Figure 2. - Flight-weight propellant tank 2 used for insulation studies.

helium pressurization gas located between the two cryogenic propellants. In all the insulation tests, for safety, liquid nitrogen was used in the liquid-oxygen compartment, and cold helium gas was stored in the heavy-walled sphere. The liquid-hydrogen compartment volume was 33 cubic feet with a wall surface area, including the bottom surface, of 56 square feet. Because of this design, considerable heat flow to the liquid hydrogen occurred through the bottom of the tank. The portion of the tank not wetted by the hydrogen representing this heat flow through the dome is generally not critical. The heat leak through this portion is carried away with the vent gases.

A second tank design (fig. 2), aimed at reducing the heat flow through the wetted area, was achieved by inverting the overall unit of tank 1. This placed the liquid hydrogen above the liquid nitrogen and thereby reduced the temperature difference across the bottom. Heat inflow was further reduced by replacing the helium sphere with a vacuum-insulated intermediate bulkhead of double-wall construction (see fig. 2). This design also allowed for a viewing window to be installed at the top of the liquid-hydrogen compartment. The liquid-hydrogen volume was 35 cubic feet, and the cylindrical wall surface area was 51 square feet.

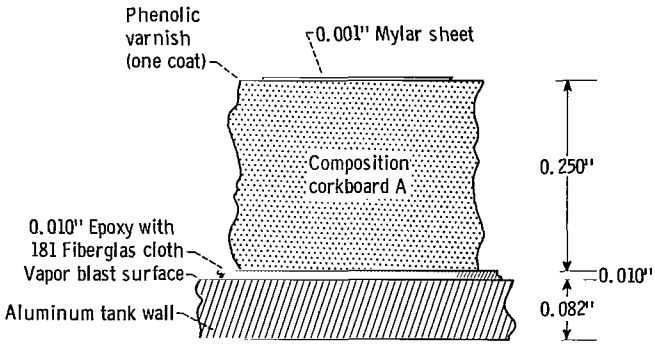

Figure 3. - Externally bonded corkboard insulation design for liquid-hydrogen fueled rocket tanks using seal against air penetration on outside surface. Insulation system weight, 0.53 pound per square foot.

Heat inflow through the heavy steel flange at the base of the bulkhead was reduced by excluding the liquid hydrogen from the V-shaped annulus around the bottom of the tank. A filler of polyurethane foam about 6 inches deep was held in this annulus by a wire screen (see fig. 2).

Sealed-Corkboard Insulation

Test tank 1 was completely covered externally with a 1/4-inch-thick layer of corkboard insulation with a density of 20 pounds per cubic foot. A cross section of this insulation system is shown in figure 3. The corkboard was bonded to the aluminum tank walls with an epoxy adhesive (Epon 820) by using an intermediate layer of style 181 Fiberglas cloth between the corkboard and the tank wall. In a previous investigation (ref. 3) the glass cloth was found necessary to prevent debonding of the corkboard during cooldown of the tank walls. The outside surface of the corkboard was sealed by a covering of thin Mylar film and phenolic varnish to prevent air accumulation in the corkboard due to cryopumping during cooldown. This method of sealing was used on the cylindrical surfaces, where only a single curvature existed. On double-curvature surfaces such as the bottom and top domes of the tank, where the Mylar could not be readily applied, a blimp lacquer was used as the surface sealer. The overall weight of the insulation system was 0.53 pound per square foot.

The experimental method for insulating liquid-hydrogen tanks reported in reference 3 described corkboard applied to the cylindrical side wall surfaces of a small tank. The materials, techniques, and engineering employed here were the same as those described in reference 3 but were applied to more complex surfaces and around connections to the tank.

Sealed and Constrictively Wrapped Polyurethane Foam Insulation

The low weight of this second insulation concept is derived principally from (1) the use of very low-density foam that is hermetically sealed and (2) the method of attachment of the sealed foam to the liquid-hydrogen tank. The structurally weak foam requires added reinforcement if only adhesive bonding to the tank wall is used to hold the foam in place during launch. This would increase the weight of the foam. The method used herein employs a prestressed constrictive wrap of lightweight nylon strands that applies a compressive load to force the sealed foam against the tank wall. This technique appears sufficient to keep the foam in place without heavy reinforcement techniques. Details of the sealed and constrictively wrapped system as applied to tank 2 are shown in figure 4.

Sealing technique. - Rigid polyurethane foam with a density of 2.5 pounds per cubic foot (1/4-in. thick) was hermetically sealed by a covering of aluminum

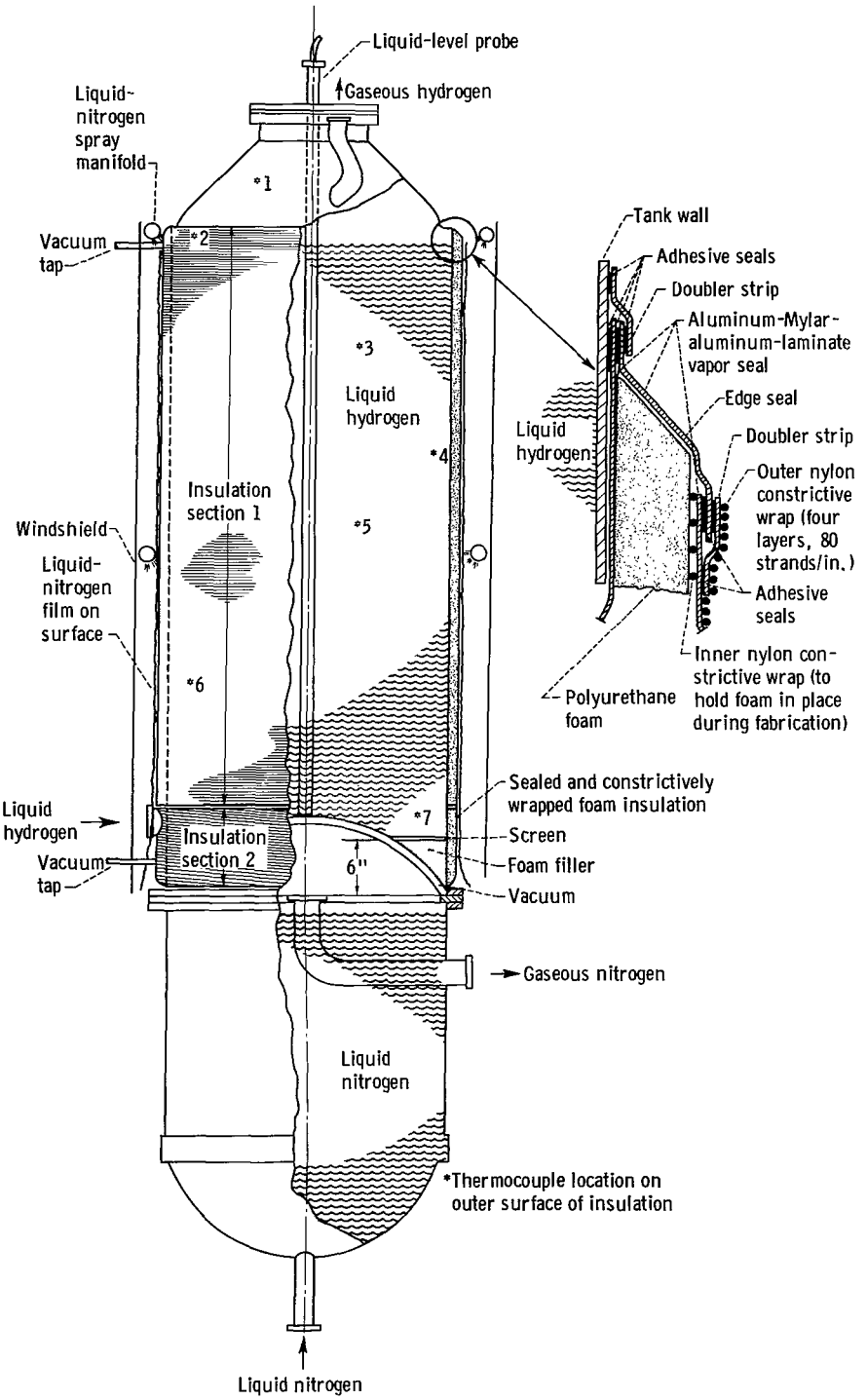

Figure 4. - Details of sealed and constrictive-wrapped polyurethane foam insulation system applied to propellant tank 2 and of liquid-nitrogen spray system. Insulation system weight, 0.25 pound per square foot.

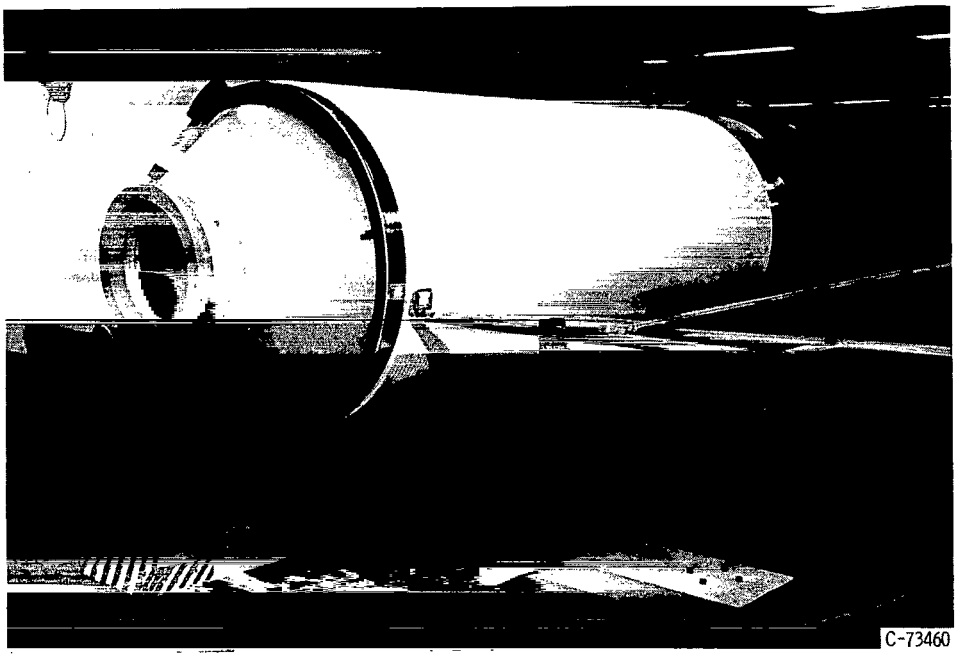

Figure 5. - Nylon constrictive wrap being applied to hold foam insulation to liquid-hydrogen tank.

foil and Mylar laminate. This sealing laminate (total thickness only 0.0022 in.) is composed of two layers of impermeable aluminum foil, each 0.00035 inch thick, bonded to both sides of a sheet of Mylar film 0.0015 inch thick. This material is available commercially as a vapor barrier in various thicknesses and laminates.

For ease of handling in a large-scale application, the foam should be applied in previously sealed individual panels. A number of separate panels would improve the reliability of the system in that a leak would be localized and not affect the entire system. However, because of the small size of the tank insulated herein, individually sealed panels were not used. Instead, foam slabs 1/4 inch thick and 6 inches wide were placed directly over a layer of sealing laminate that had been previously wrapped against the cylindrical walls. No adhesives were used to bond either the laminate to the tank walls or the foam to the laminate. This necessitated using a widely spaced (1/2-in.) circumferential wrap of nylon strands applied by a filament winding machine, as shown in figure 5, to hold the foam in place prior to covering the outer surfaces with the sealing laminate. This wrap was not the main constrictive wrap for holding the insulation against the tank walls. The outer layer of sealing laminate was not bonded to the foam. Adhesive (Minnesota Mining and Manufacturing number 465 with Chem-Lock surface cleaner) was used only to bond inner and outer layers of laminate at the top and bottom edges of the foam. These edges were sealed with a narrow strip of laminate stretched around the circumference of the tank and overlapping the inner and outer sealing laminates. Doubler strips were added to ensure a positive seal at the bond lines on the edges and at the interface between the inner laminate and the tank wall.

The liquid-hydrogen fill and drain line connection near the bottom of the

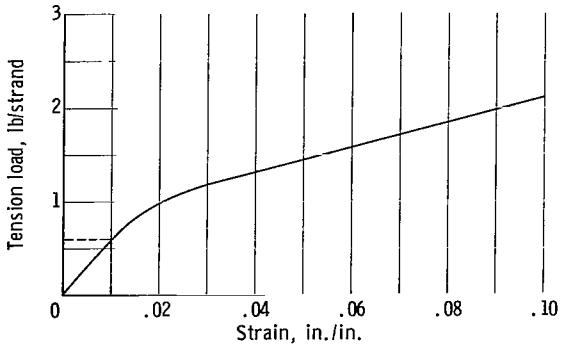

Figure 6. - Load-strain curve for single-strand nylon constrictive wrap.

hydrogen compartment (tank 2) presented a sealing problem where the line protuded through the sealed foam. Therefore, the circumferential area between this protuberance and the top of the cylindrical part of the tank was insulated and sealed as one continuous section. The short distance between the fill line and the bottom of the liquid-hydrogen compartment, which included the protuberance, was insulated and sealed as a second separate section.

Because of the importance of a good hermetic seal, the insulation was carefully checked for leaks by using a mass spectrometer. Taps into the interface between the foam and the outer coverings (fig. 4) were used in each sealed section to pump a vacuum within the insulation. The entire outer surface was surveyed with a jet of helium gas. Leaks in the outer covering, even at the end opposite the taps, were detected by the mass spectrometer attached to the vacuum system. These leaks were repaired by patching around the area of the leaks with the sealing laminate and the same adhesive as used to bond the laminate at the edges.

Constrictive-wrap technique. - The constrictive wrap applied over the sealed insulation used nylon strands wound by the filament winding machine shown in figure 5. Nylon was chosen because of the high strain available in the strands. The constrictive wrap must have sufficient strain in the applied condition to maintain positive compression on the insulation during tank shrinkage from ambient to liquid-hydrogen temperature (about 0.4 percent for the aluminum alloy tank). The compressive load on the insulation at ambient temperatures was somewhat arbitrarily chosen at about 3 pounds per square inch with a minimum strain of 1 percent in the wrap. The experimentally determined load-strain curve for the nylon strands that was used (fig. 6) shows that 1-percent

TABLE I. - WEIGHT BREAKDOWN OF SEALED AND CONSTRICTIVELY WRAPPED FOAM INSULATION SYSTEM

Material	Thickness, in.	Density, lb/cu ft	Weight, lb/sq ft
Polyurethane foam	0.25	2.5	0.0521
Nylon constrictive wrap (four layers)	.028	70	.163
Sealing laminate			
Aluminum foil	.00035	170	.0049
Mylar	.0015	87	.0109
Aluminum foil	.00035	170	.0049
Total (one layer)	0.00220	-----	0.0207
Total (two layers)	0.00440	-----	0.0414
Total system weight			[a]0.2565

[a]Total system weight = weight of polyurethane foam, weight of nylon constrictive wrap (four layers), total weight of sealing laminate (two layers).

strain requires about 0.6 pound of tension in each strand (bundle of 204 monofilaments). The total tension load in the wrap must be 48 pounds per inch to provide a 3-pound-per-square-inch compressive load on the 16-inch-radius tank. Thus, the nylon wrap was applied in four layers (each about 0.007-in. thick) with 80 strands per inch at a very low angle of wrap (almost no spacing between adjacent strands). The bottom two layers were applied dry, and the top two layers were wrapped with a silicone resin binder (Dow Corning A-4000). The resin was used to hold the wrap together and prevent unwinding in case of strand breakage.

Weight of system. - The installed weight of the sealed and constrictively wrapped foam insulation system was 0.26 pound per square foot. The weight breakdown is listed in table I. The installed weight of the foam system is less than one-half that of the corkboard insulation system described previously.

Liquid Nitrogen Sprayed Over Sealed Foam

For the third insulation system investigated, a thin film of liquid nitrogen was sprayed over the outer surface of the insulation to reduce the heat inflow to the liquid hydrogen further. The insulation surface was kept wet with liquid nitrogen and thus held at liquid-nitrogen temperature by a series of spray nozzles around the circumference of the tank. An outer sheet-metal shield protected the spray from wind and convection currents and thereby reduced the evaporation losses of the nitrogen. A sketch of the liquid-nitrogen spray system surrounding the tank is shown in addition to the sealed-foam design in figure 4. The spray system was not necessarily designed to optimize the distribution or flow rate of the liquid nitrogen.

TEST APPARATUS AND PROCEDURE

The insulated tanks were tested in the open outside stand shown in figure 7. A schematic diagram of the flow system used in the tests is shown in figure 8.

Instrumentation

Information required to determine the thermal effectiveness of the insulation systems consisted of (1) surface temperatures (exterior walls of tank and outer surfaces of insulation), (2) rate of boiloff of liquid hydrogen, and (3) area of cylindrical portion of tank wetted by liquid hydrogen. Surface temperatures were measured by copper-constantan thermocouples attached to the surface with epoxy adhesive. The locations of the thermocouples on the test tanks are shown in figure 1 (p. 4) for the uninsulated and the corkboard-insulated tanks and in figure 4 (p. 6) for the sealed-foam-insulated tanks with and without the liquid-nitrogen spray.

Instrumentation was provided to determine the boiloff rate from two measurements: rate of change in liquid level in the tank and flow rate of the vent gas. The liquid level was measured by a capacitance-type probe extending

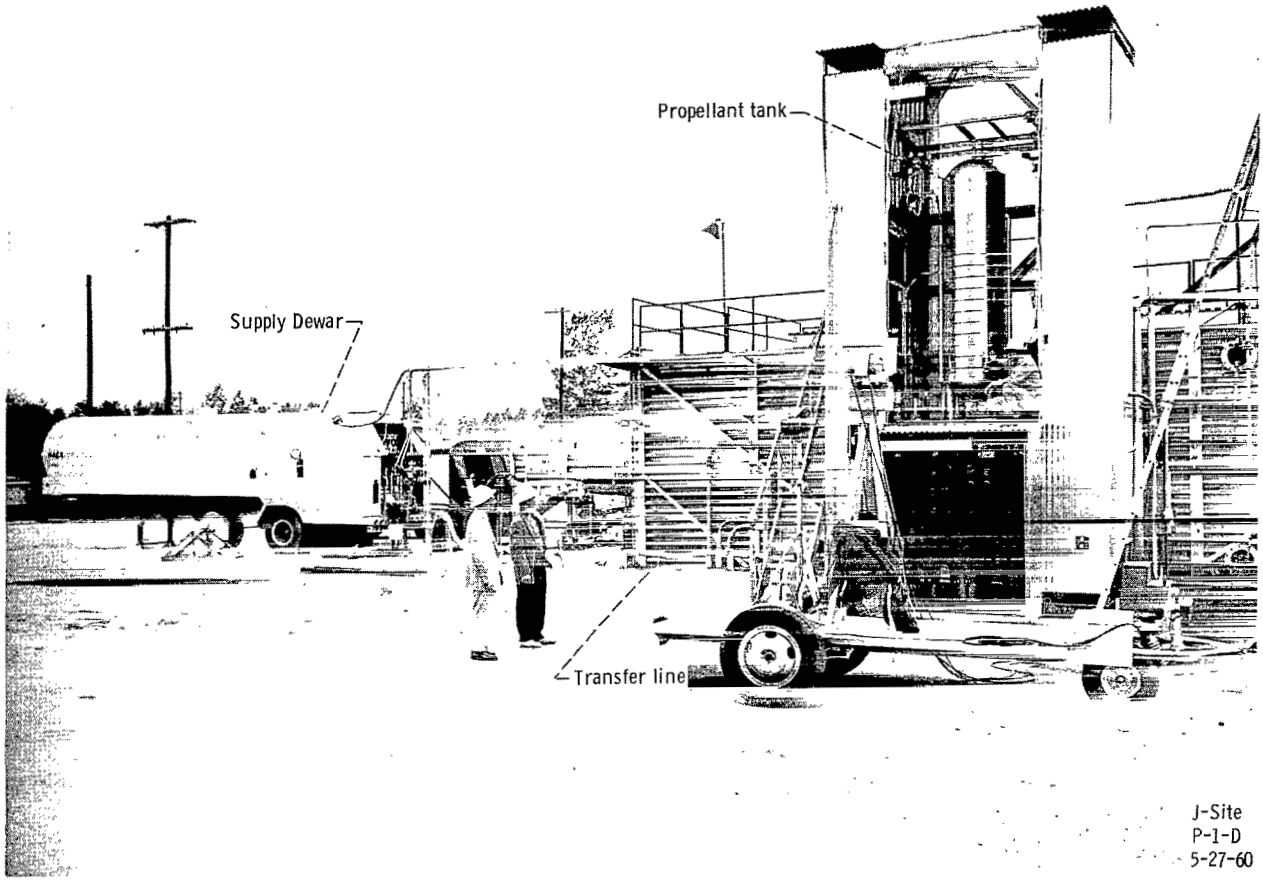

Figure 7. - Propellant tank stand used for insulation studies of liquid-hydrogen propellant tanks.

longitudinally through the liquid-hydrogen tank (figs. 1, 2, and 4, pp. 4 and 6). Volume flow rate of the vent gas was measured by a calibrated orifice located near the exit end of the vent line (fig. 8). Since safety requirements dictated the use of a long vent line, its length was utilized as a heat exchanger to raise the temperature of the vent gas at the flow measuring orifice to nearly ambient temperature so that the ideal gas law could be used to obtain gas density. Pressure drop across the orifice plate was measured by a differential pressure transducer. Vent gas temperature and pressure required to obtain mass flow rate were measured just upstream of the orifice plate by a copper-constantan thermocouple and a pressure transducer, respectively. The temperature and pressure measurements were recorded on a multichannel oscillograph.

No further instrumentation was required to determine the wetted area. The wetted area was determined from the tank geometry and the liquid level. The liquid level can be obtained either directly from level gage measurements or indirectly by integrating the vent mass flow rate to obtain the change in liquid level from a known level.

The flow systems were instrumented as shown in figure 8 to monitor system

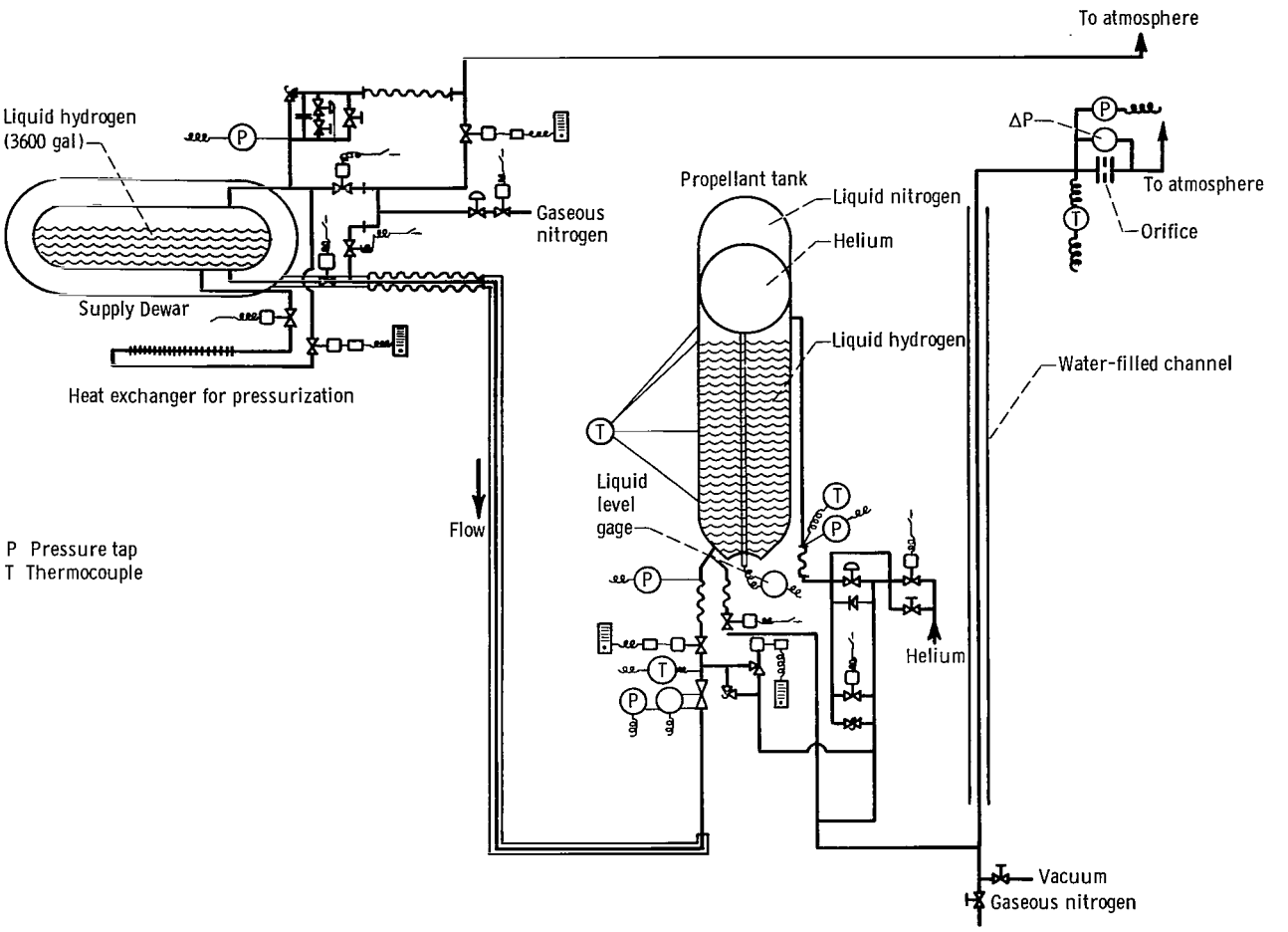

Figure 8. - Schematic of flow system instrumentation used for studies of insulation systems on liquid-hydrogen propellant tanks.

pressures and temperatures during the filling and boiloff periods. Closed-circuit television, remotely controlled cameras, and observers posted at selected safe areas provided for surveillance of the test area during operations. Field calibrations of the pressure and temperature systems were made prior to each run.

Test Procedure

General safety precautions were followed during the testing, including adequate ventilation around the test tank, which was mounted in an outside stand as shown in figure 7. Test operations were conducted from a remote area.

Prior to remote operation, the liquid and vent gas lines were evacuated to about 1 inch of mercury absolute and then filled with helium gas at a pressure slightly above atmospheric. The test tank was purged with nitrogen gas and then helium gas prior to loading. Loading of the test tank to capacity was indicated

by the liquid-level probe and also by a sudden increase in vent flow rate as liquid hydrogen was pulled off the surface near the top of the tank into the vent line by the high-velocity vent gas. At this point the inlet valve was closed and the liquid hydrogen was allowed to boil off at a constant tank pressure of about 20 pounds per square inch gage until the tank was empty. Boiloff rates (change in liquid level and vent flow rate) were continuously recorded along with all surface temperatures during the boiloff period. Also recorded for test tank design 2 was the vacuum in the intermediate bulkhead, which usually held under 10^{-3} torr during the boiloff tests.

After the test tank was empty, a remotely operated purge system was used to purge the test tanks and flow lines with helium. Following this operation, it was considered safe to return to the area around the test stand. These procedures were followed for each tank and insulation configuration tested.

METHOD OF ANALYSIS AND DATA REDUCTION

The method used to determine the thermal performance of the test insulations and the uninsulated tank is basically the one described in reference 4 for a cylindrical thermal-conductivity apparatus. Fundamentally, the method consists in filling the test tank with liquid hydrogen and allowing the incoming heat to vaporize the liquid at constant tank pressure. Tank pressure is maintained constant by controlled venting. During the boiloff period, measurements are made to determine (1) total heat flow rate to the liquid, (2) area of tank adjacent to test insulation that is wetted by liquid, and (3) a representative temperature difference across insulation. The basic assumptions required for this method are (1) heat flow into the tank is one-dimensional and perpendicular to the tank walls, (2) steady-state conditions exist in the insulation and the tank walls, (3) the heat flow rate to liquid through wetted areas of tank walls not adjacent to the test insulation is constant, and (4) no heat is transmitted to the liquid by way of the ullage gas. With these assumptions, an analytical expression for the thermal conductivity (or the heat-transfer coefficient, depending upon whether an insulation thickness is known or used) can be derived that can be evaluated by experimental measurements.

The total heat inflow rate to the liquid $\dot{Q}_T$ can be expressed as

$$\dot{Q}_T = \dot{Q}_I + \dot{Q}_E \tag{1}$$

where

$\dot{Q}_I$ heat flow rate to liquid through test insulation of tank, Btu/hr

$\dot{Q}_E$ heat flow rate to liquid from other sources (tank end, piping, etc.), Btu/hr

For an insulation thickness that is small compared with the tank radius and if steady-state conditions are assumed, the heat flow rate through the insulation $\dot{Q}_I$ can be obtained from a linear form of the Fourier conduction equation

$$\dot{Q}_I = K_a A_w \frac{\Delta T}{\Delta x} \tag{2}$$

where

K_a apparent thermal conductivity, (Btu)(in.)/(hr)(sq ft)($^{\circ}$R)

A_w wetted area of tank wall adjacent to test insulation, sq ft

ΔT representative temperature difference across test insulation, $^{\circ}$R

Δx insulation thickness, in.

Substitution of equation (2) into equation (1) yields

$$\dot{Q}_T = K_a A_w \frac{\Delta T}{\Delta x} + \dot{Q}_E \tag{3}$$

If K_a, ΔT, Δx, and $\dot{Q}_E$ are taken constant and independent of wetted area A_w, differentiation of equation (3) with respect to wetted area gives

$$\frac{d\dot{Q}_T}{dA_w} = K_a \frac{\Delta T}{\Delta x} \tag{4}$$

which can be solved for the apparent thermal conductivity

$$K_a = \frac{d\dot{Q}_I}{dA_w} \frac{\Delta x}{\Delta T} \tag{5}$$

The thermal conductivity of solid materials is a function of the mean temperature of the material. If the mean temperature is fixed along with the temperature difference across the insulation ΔT and the insulation thickness Δx, then equation (3) is the equation of a straight line with a slope of $K_a \frac{\Delta T}{\Delta x}$ (eq. (4)) and an ordinate intercept equal to $\dot{Q}_E$. In other words, the total heat inflow rate to the liquid $\dot{Q}_T$ is a linear function of the wetted area A_w. Thus, if experimentally determined values of total heat in flow rate $\dot{Q}_T$ plotted as a function of wetted area A_w result in a straight line, the thermal conductivity of the test insulation can be determined from the slope of the line by using equation (5). The straight line is also an indication of the validity of the assumptions made in deriving equation (3).

The apparent thermal conductivity obtained by equation (3) may be that of the insulation itself or may be a composite of several thermal resistances (tank wall, thermal contact resistance, etc.) depending upon where the temperatures used to determine a representative temperature difference are measured. In some cases, such as that of the uninsulated tank of this report, it may be more meaningful to determine an overall heat-transfer coefficient h_a because of the difficulty of establishing a precise insulation thickness. An analytical expression for an overall heat-transfer coefficient h_a is obtainable from equation (5) by dividing both sides of the equation by Δx:

$$h_a = \frac{d\dot{Q}_T}{dA_w} \frac{1}{\Delta T} \tag{6}$$

since by definition, $h_a = K_a/\Delta x$.

A direct measure of the total heat flow rate to the liquid is not possible. The procedure usually used to obtain this quantity is to measure the volume flow rate of boiloff gas and to convert this to mass flow rate $\dot{M}$ by standard methods. The total heat inflow rate to the liquid $\dot{Q}_T$ is then calculated from the mass flow rate and the heat of vaporization of the liquid h_g by the relation

$$\dot{Q}_T = \dot{M}h_g \tag{7}$$

where

$\dot{M}$ mass flow rate, lb/hr

h_g latent heat of vaporization (182 Btu/lb for liquid hydrogen at 35 lb/sq in. abs)

This approach requires that all the heat entering the liquid results in vaporization, and that the mass rate of evaporation at the liquid-vapor interface is equal to the mass flow rate of vent gas at the measuring station, that is, that the mass storage capacity of the tank ullage and associated vent piping is constant. These requirements can be essentially met if the tank pressure and the mass average temperature of the gas in the tank and the vent lines are constant during the boiloff period. Pressure changes result in a change in heat storage capacity of the liquid through the change in saturation temperature, whereas pressure and gas ullage temperature changes result in changes in mass storage capacity in the ullage.

An alternate method of calculating the total heat flow rate to the liquid is to measure the rate of change in liquid level, which, by the use of the tank geometry, can be converted to mass loss rate of liquid. This mass loss rate is equivalent to the mass flow rate $\dot{M}$ obtained by measuring the boiloff gas flow rate, and thus equation (7) can be used to obtain the total heat flow rate to the liquid. This method requires that only the tank pressure be held constant so that the heat storage capacity of the liquid does not change during the boiloff period.

For the insulation thermal performance tests reported herein, instrumentation was provided to determine the total heat flow rate to the liquid by both procedures outlined. The liquid-level method was used in the analysis of the data, however, because the measurements of boiloff gas flow rate were erratic and it was difficult to define accurately the slope of the plot of total heat flow rate $\dot{Q}_T$ as a function of wetted areas A_w.

In reducing the test data for the various insulations, the liquid level or height was plotted as a function of boiloff time, as shown for a typical test in figure 9 for the sealed-foam insulation. The rate of change in liquid level,

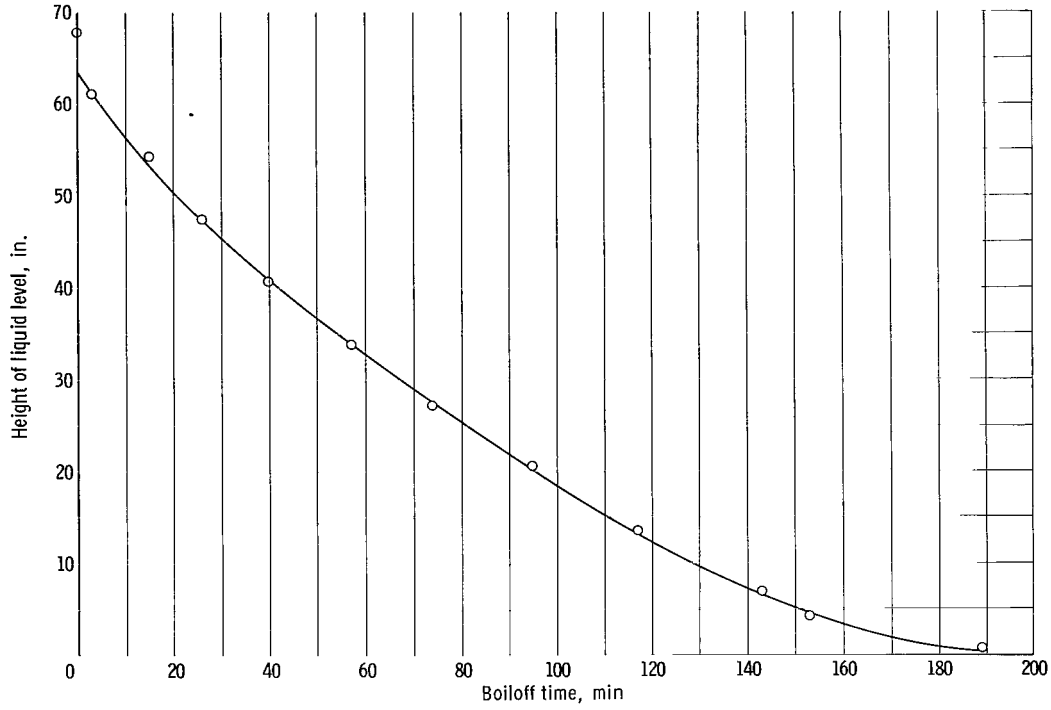

Figure 9. - Typical change in liquid level during boiloff of liquid hydrogen from sealed-foam-insulated tank.

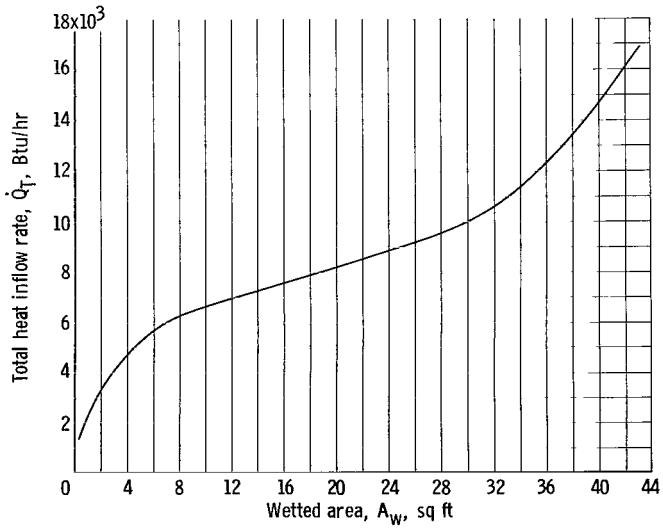

Figure 10. - Typical plot of total heat inflow rate against wetted area as determined from boiloff curve of figure 9.

which is required to determine the mass loss rate of liquid, was determined from the local slope of the faired curve of liquid level against boiloff time at various levels. The mass loss rates $\dot{M}$ were then converted to total heat inflow rates to the liquid $\dot{Q}_T$ by equation (7). The total heat flow rates thus obtained were then plotted as a function of wetted area A_W. A typical plot of $\dot{Q}_T$ as a function of A_W (same test as shown in fig. 9) is shown in figure 10. The resulting plot is not a straight line over the complete range as was predicted by the analysis (eq. (3)). The curve is fairly linear in the midportions of the tank but deviates considerably at high and low liquid levels.

The deviation at the high liquid levels is probably due to nonsteady-state conditions; that is, insulation and tank walls are

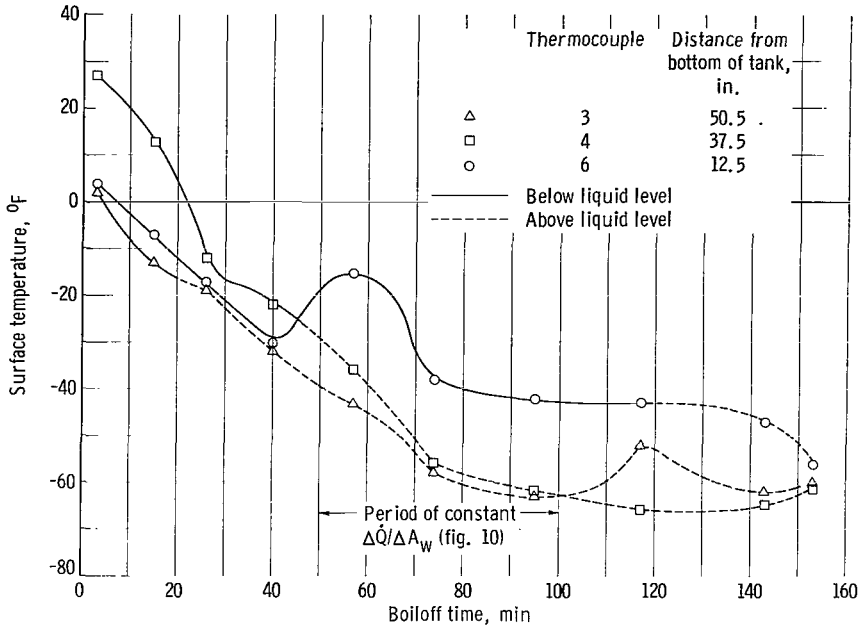

Figure 11. - Typical variations in surface temperatures during boiloff of liquid hydrogen from sealed-foam-insulated tank. (Thermocouple 5 was inoperative.)

not at the final equilibrium temperature. At the low liquid levels, the assumption of one-dimensional heat flow through the test insulation is probably not valid because of the disturbing effect of the heat leak through the tank bottom. An estimate of the heat flow through the tank bottom can be obtained by extending the linear portion of the total heat-flow curve to zero wetted area.

The final step in the evaluation of the thermal performance of the insulation system was the determination of the apparent thermal conductivity of the insulation K_a by the use of equation (5). The parameter $d\dot{Q}_T/dA_W$ was determined by the slope $\Delta\dot{Q}_T/\Delta A_W$ of the linear portion of the curve of total heat flow rate as a function of wetted area, as illustrated in figure 10. The insulation thickness Δx was taken as the thickness of the basic insulation material (0.25 in. for both corkboard and sealed foam). The only other factor needed to determine the apparent thermal conductivity of the insulation system is a representative value of the temperature difference ΔT across the insulation.

The solution of a representative temperature difference ΔT across the insulation was complicated by the fact that the outer insulation surface temperature varied both in time and from one position to another, as shown in figure 11 for the sealed-foam-insulated tank (same test as figs. 9 and 10). In the early portion of the boiloff period, the temperatures at all positions decreased rapidly with time as frost formed over the insulation surface. The temperature decreased as the frost accumulated because of the insulating effect of the frost. This rapid change in temperature is an indication that a steady-state condition did not exist in the insulation, and this is reflected in the total heat flow rate for the nearly full tank (fig. 10). The differences in temperatures at various positions for any given time are not completely understood. The thermocouples were located at various circumferential positions on

the tank wall as well as at various axial positions, so they may have encountered considerable variations in frost thickness. The test tanks were mounted in a partially open outside test stand, and therefore the wind direction and the velocity may have influenced the local thickness of the frost. The wind was observed to blow off small areas of frost from time to time. Loss of frost was probably the cause of the occasional sudden increases in insulation temperature shown in figure 11. During and following the period of constant heat flux, the outer skin temperatures were more nearly constant with time but still showed a variation with position.

In the determination of a representative outer surface temperature, only the temperatures measured below the liquid level and during the constant-heat-flux portion of the boiloff period were considered. The representative temperature selected was an average value over this time period and included various positions if more than one thermocouple was located below the liquid level. The internal insulation thermocouples did not exhibit large variations in temperature either in time or with position. These temperatures were approximately that of the liquid hydrogen. The selection of a representative outer insulation temperature was not as critical in the determination of thermal conductivity in these cases as it might be in other cases, because the variations in outer insulation surface temperature are small compared with the temperature difference across the insulation. The differences in outer insulation temperatures for the insulated tank were of the order of 30° F, while the temperature difference across the insulation was of the order of 350° F. Thus, an error of 15° F in outer insulation temperature would produce an error of about 4 percent in thermal conductivity.

The data reduction procedure outlined previously applies only to the insulated tanks. For the uninsulated tank tests, an overall heat-transfer coefficient was determined (eq. (6)) because an insulation thickness could not be defined. The temperature difference used was the difference between ambient atmosphere and liquid hydrogen.

RESULTS AND DISCUSSION

This section presents (1) qualitative observations during the ground-hold testing of the three insulation systems studied and (2) the thermal performance of each system measured from boiloff tests. The thermal-performance data for both the uninsulated tank and the tanks insulated with corkboard and sealed polyurethane foam are given in table II.

Corkboard Insulation

Following the first loading of tank 1 with liquid hydrogen, inspection of the outer surfaces revealed cracks in the corkboard, particularly in the bottom dome area, as shown in figure 12, and in the Mylar seal on the cylindrical surfaces. Later inspection showed separation of the corkboard from the walls of the tank. In fact, when the insulation was completely removed from the tank at the completion of testing, about 50 percent of the surface area was found to be unbonded. Loss of insulating effect occurs when air enters the insulation,

TABLE II. - THERMAL PERFORMANCE OF INSULATED AND UNINSULATED TANKS

Insulation type	Test	Average outside surface temperature, °F	Representative temperature difference across insulation, ΔT, °F (a)	Arithmetic mean insulation temperature, °R	Total heat inflow rate, $\dot{Q}_T/A_w$, $\frac{\text{Btu}}{(\text{hr})(\text{sq ft})}$	Overall heat-transfer coefficient, h_a, $\frac{\text{Btu}}{(\text{hr})(\text{sq ft})}$	Apparent thermal conductivity, K_a, $\frac{(\text{Btu})(\text{in.})}{(\text{hr})(\text{sq ft})(^\circ\text{R})}$
Corkboard - insulated tank (1/4 in. thick)	1	-83	335	227	325	--	0.24
Sealed and constrictively wrapped polyurethane-foam-insulated tank (1/4 in. thick)	1 2 3	-25 -32 -80	393 386 338	238 235 211	156 156 102	-- -- --	0.10 .10 .08
Liquid nitrogen sprayed over sealed foam	1	-317	101	93	30	--	0.07
Uninsulated tank (condensing air on surface)	1	-340	78	--	8120	16.3	----
Uninsulated tank (layer of ice and frost on surface)	1	-380	38	--	3960	8.0	----

[a]Inside temperature of -418° F assumed for saturated liquid at tank pressure of 20 lb/sq in. gage.

particularly if it reaches the tank walls and condenses. This is apparently what occurred, since blisters in the Mylar surface in several areas indicated failures in the seal, which allowed air eventually to reach the tank surface. During warmup after a test, expansion of the liquid air broke the bond between the corkboard and the tank. Sharp cracking sounds heard during the boiloff period could have been caused by this action taking place. Other investigators (ref. 5) have observed similar results with corkboard on tanks containing liquid hydrogen.

The failure of the corkboard insulation in these tests may have been the result of the inadequacy of techniques for bonding and sealing to complicated surface contours (top and bottom domes) and around attachments to the tank. Application techniques, which were successful as described in reference 3 and followed here, were employed in reference 3 only on the straight cylindrical surface of a small tank. Fabrication problems for curved surfaces and joints were not sufficiently resolved in the limited scope of this investigation to produce a completely successful system.

The total heat inflow rate $\dot{Q}_T$ determined from the boiloff tests of the corkboard insulated tank is shown in figure 13 plotted against wetted area A_w. The apparent thermal conductivity determined from the nearly linear portion of the curve shown in figure 13 (0.24 (Btu)(in.)/(hr)(sq ft)(°R)) was about the

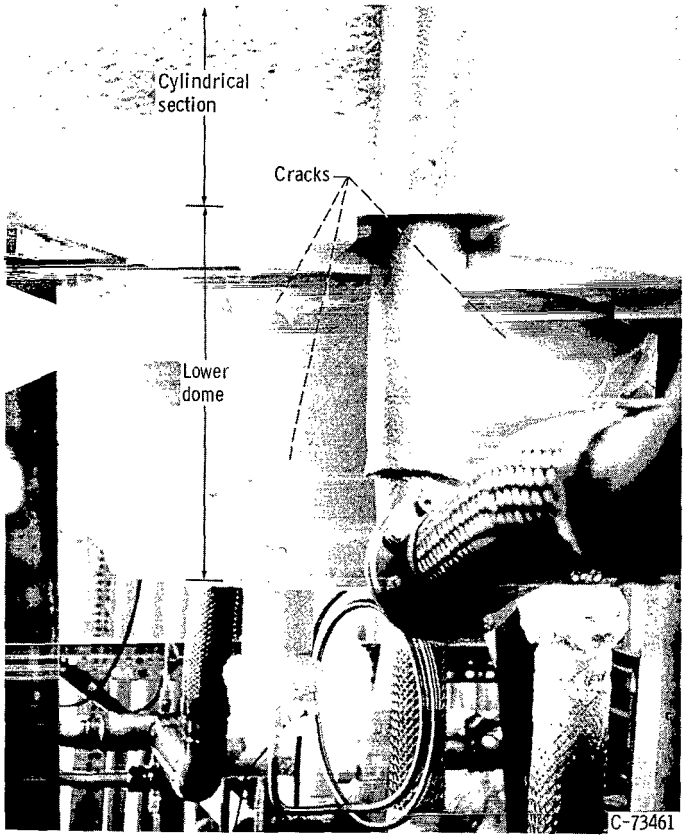

Figure 12. - Cracks in corkboard insulation (area sealed with lacquer on lower dome) following cooldown of tank with liquid hydrogen.

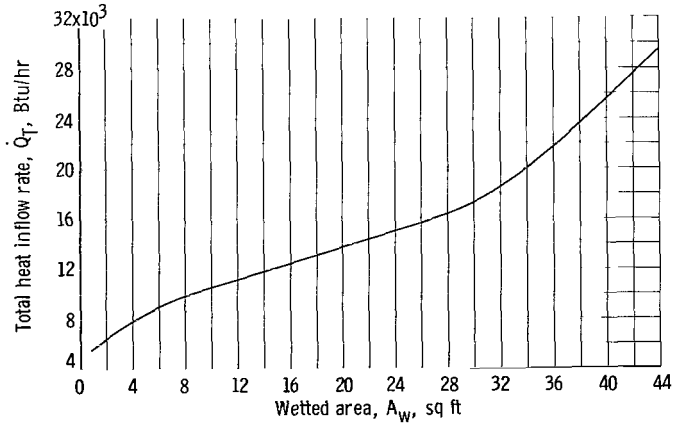

Figure 13. - Plot of total heat inflow rate against wetted area for boil-off tests of corkboard-insulated tank.

same as that reported in reference 3 for a small test tank (0.24 to 0.26 (Btu)(in.)/(sq ft)(^{o}R)).

Sealed and Constrictively Wrapped Foam Insulation

Although the foam insulation was designed as a completely sealed system and was helium tight before testing, some leaks were detected by the vacuum measurements during the first cooldown of the tank to liquid-hydrogen temperature. These leaks were located and repaired with patches of the sealing laminate and/or Narmco adhesive applied over the area of the leak. A positive seal between the tank walls and the foam panels on the circumferential end seals at the top and the bottom of the tank was the most difficult to achieve. On succeeding cooling cycles, however, the seal remained air tight. The pressure at the tap on the outside of the foam indicated less than 25 microns with continuous vacuum pump operation.

One cause of leaks occurring at low temperatures was the shrinkage of the tank during cooldown, particularly in the longitudinal direction. Some buckling of the outer nylon constrictive wrap in the axial direction of the tank occurred, as evidenced in figure 14 by wrinkles showing through the frost layer. This buckling action undoubtedly caused undesirable shear forces on the seal material under the wrap. In the application tested here the wrap was applied at a very small helix angle with little separation between strands. Thus, when the cold tank wall contracted, the warmer outer wrap could not follow the reduced length without buckling.

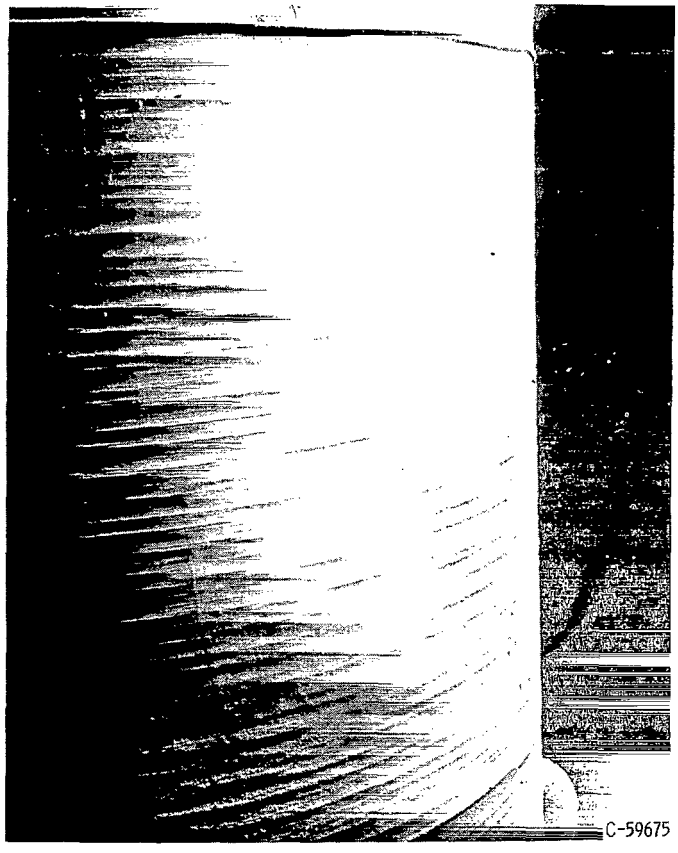

Figure 14. - Buckling of nylon outer wrap from shrinkage of foam-insulated tank (tank 2) filled with liquid hydrogen.

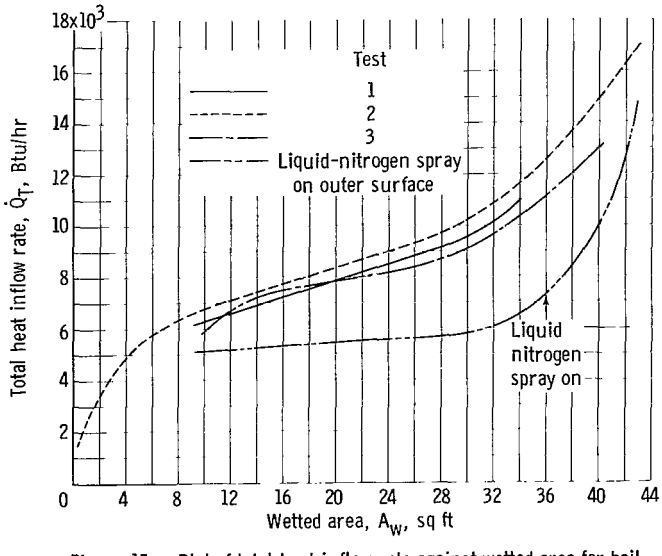

Figure 15. - Plot of total heat inflow rate against wetted area for boil-off tests of sealed and constrictively wrapped foam-insulated tank.

Buckling of the wrap can probably be prevented by providing a wider spacing between adjacent strands and wrapping at a greater helix angle.

The thermal performance for the sealed-foam insulation was determined from three boiloff tests. The total heat inflow rates during these tests are shown in figure 15 plotted against wetted area. The average apparent thermal conductivity K_a determined from these curves (0.10 (Btu)(in.)/(hr)(sq ft)($^{\circ}$R) at a mean temperature of about 235° R) is about the lowest value that can be expected from foam-insulated liquid-hydrogen tanks. A comparison of this value with the basic thermal conductivity for the closest reference data for this type of foam (ref. 6) is shown in figure 16, where K_a is plotted as a function of the mean temperature between the warm outside and cold inside surfaces of the foam. The overall K_a for the sealed-foam system appears to be slightly lower than that measured for a similar type foam in a thermal-conductivity apparatus. This may be explained by the fact that the K_a value measured herein represents an overall value for the sealed-foam system, where a vacuum existed between the hot and cold surfaces of the insulation system. This vacuum may have aided in the overall insulation effect. Actually the improved overall K_a value from the evacuated system is a bonus since the foam must be sealed to prevent cryopumping of air into the foam.

The results obtained in this study show the advantage of a sealed-foam system over a helium purge system, where according to unpublished data obtained at Lewis the apparent thermal conductivity K_a can be as high as

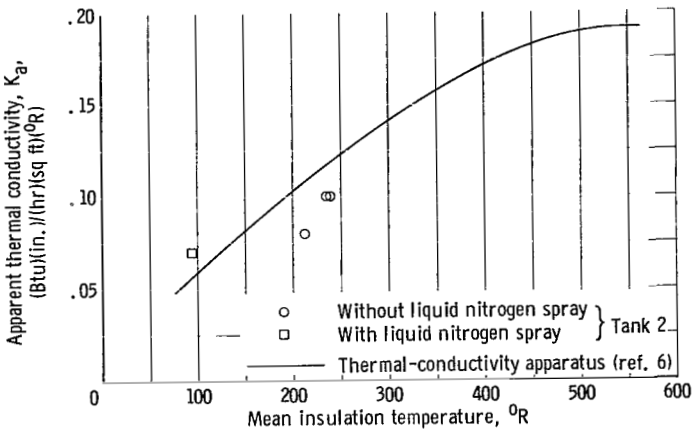

Figure 16. - Comparison of previous thermal-conductivity data and results for propellant tank 2 on sealed and constrictive-wrap Freon-blown polyurethane foam insulation with density of 2.5 pounds per cubic foot.

0.52 (Btu)(in.)/(hr)(sq ft)(°R), which is about five times greater. Higher thermal conductivity requires thicker foam for the same heat inflow, which in turn means a heavier insulation system.

Liquid Nitrogen Sprayed Over Sealed Foam

The sealed and constrictively wrapped foam insulation appeared to be unaffected structurally by the liquid nitrogen flowing over the outer surface during the boiloff period except for a vacuum leak that developed at an edge seal. Inspection of the insulation system materials following the liquid-nitrogen spray test and after previous tests without liquid nitrogen revealed no seriously adverse effects. Some debonding of the aluminum foil from the Mylar in the sealing laminate was noted on the cylindrical area of the tank after the liquid-nitrogen spray test. Complete inspection of the foam, however, showed no cracks or visible change in the foam structure.

The effect of the liquid-nitrogen spray on the drop in liquid level during the boiloff period can be seen in the plot shown in figure 17. A lower rate of

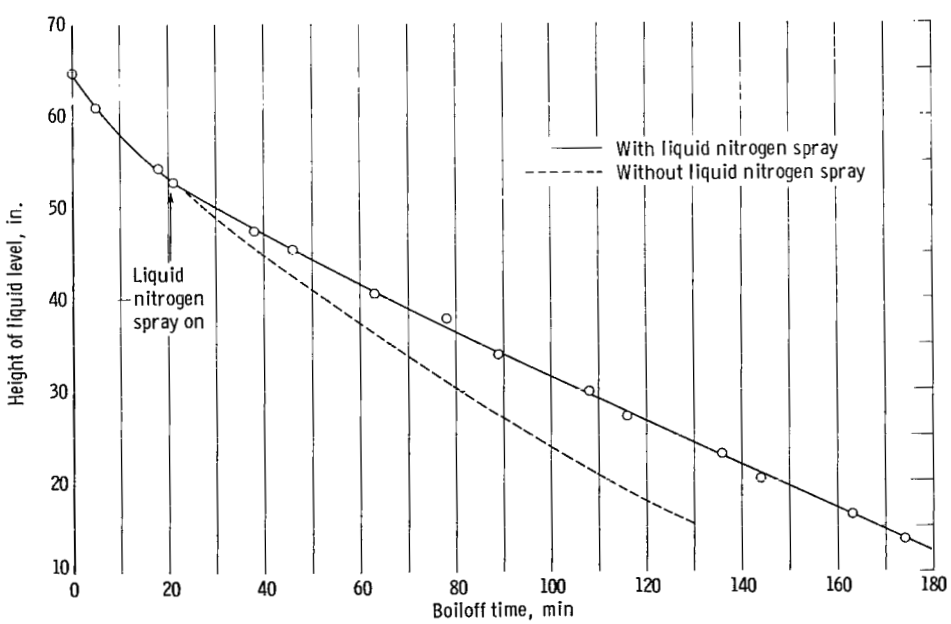

Figure 17. - Change in liquid level during boiloff of liquid hydrogen from sealed-foam-insulated tank with and without liquid-nitrogen spray over insulation.

boiloff after the spray was activated is indicated. The total heat inflow rate $\dot{Q}_T$ determined from this plot is shown in figure 15. The low temperature of the outside surface wetted with liquid nitrogen (-317° F) produced a correspondingly low temperature difference across the insulation (101° F). Thus, with a fixed thermal resistance in the insulation, a small temperature difference across the insulation produced a low heat inflow rate to the liquid hydrogen. As determined from the slope of the nearly linear portion of the curve of figure 15, the total heat inflow rate measured only 30 Btu per hour per square foot compared to 156 Btu per hour per square foot for the sealed foam without the liquid nitrogen.

The apparent thermal conductivity of the foam (0.07 (Btu)(in.)/(hr)(sq ft)(°R)) agreed generally with the basic thermal conductivity data for foam at a low mean temperature (93° R), as shown in figure 16. The conductivity was not as low as might be expected from the previous tank tests without the liquid-nitrogen spray. This may be explained by the loss in vacuum from an edge leak in the sealed foam that occurred during this test.

Uninsulated Tank

The high heat-transfer rate that can be expected through an uninsulated tank is in part caused by extremely cold exposed tank walls that can cause the liquefaction of air on the outside surfaces. The rate of flow of heat into the liquid hydrogen depends upon the difference in temperature between the outside and inside fluids, the surface conductances of the outside and inside walls, and the thermal conductivity of the wall material. The resistance to heat flow that normally exists at the outside surface drops considerably with the presence of the liquid air. This effect combined with the heat liberated by the condensation process results in a very high heat inflow rate.

Under certain conditions, a layer of ice and frost can be formed on the tank surfaces. An accumulation of frost alone is usually washed off by the liquid air. Ice, on the other hand, is much less porous, and if formed directly on the tank walls, can provide sufficient temperature gradient through a strongly adhered layer to raise the outside surface temperature above that for the condensation of air. A coating of ice thick enough to prevent air condensation can be formed on the tank walls by the ambient environment in at least two ways: (1) by melting and refreezing of an earlier frost formation, or (2) by slow cooling of the tank walls from ambient conditions to below the dew point and condensation of moisture before the temperature drops below the freezing point. Frost can, in time, form over the ice layer and remain since no liquid air is produced to wash it off.

When the tank was being filled with liquid hydrogen, a heavy frost formation occurred during cooldown of the tank walls. When liquid hydrogen began to rise in the tank, the frost appeared to melt. Actually, liquid air forming on the walls under the frost was washing the frost down the walls. As the level of hydrogen dropped in the tank during boiloff, frost re-formed above the level of the liquid. In one test the walls were allowed to warm to above freezing and then were recooled with a second loading of liquid hydrogen. In this case a layer of ice about 0.010 to 0.020 inch thick was formed directly on the tank

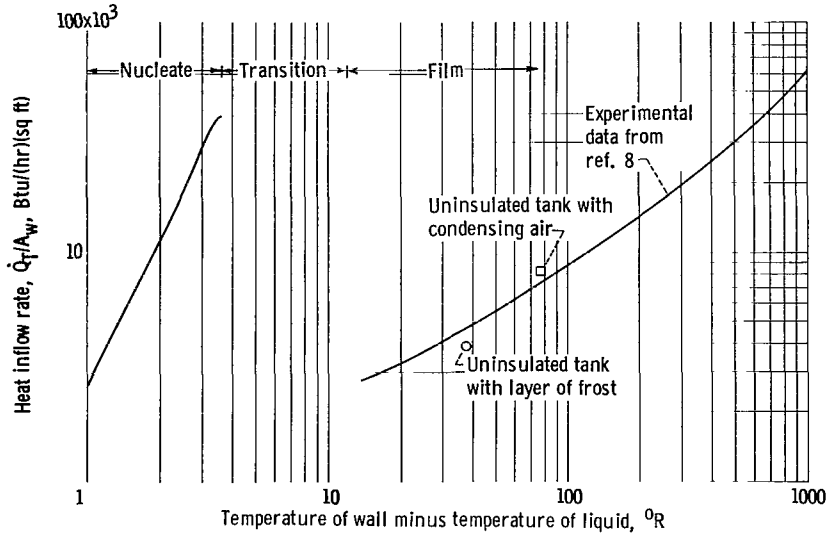

Figure 18. - Comparison of results from uninsulated tank tests with experimental data for boiling heat transfer for liquid hydrogen.

walls, and no condensing of air was observed. However, a marked change in the appearance of the frost formation that formed over the ice was seen to accompany the rise in liquid level in the tank. The very white appearance of the initial frost changed to a darker shade similar to a wet, slushy formation.

The overall coefficient of heat transfer h_a for the uninsulated tank presented in table II (p. 18) was determined from the overall heat influx $\dot{Q}/A_w$ and the difference in temperature between ambient air and the boiling liquid inside the tank. For the condition in which liquid air formed on the outer walls, the measured heat influx of 8120 Btu per hour per square foot obtained herein agreed reasonably well with a calculated value of 6700 Btu per hour per square foot given in reference 7 for similar conditions.

The insulation effect of a layer of frost and ice on a bare tank was shown to be significant in comparison with the condition for which condensing air occurred. A roughly 50-percent reduction in heat influx (to 3960 Btu/(hr)(sq ft), table II) was measured with the accumulation of ice and frost that remained on the tank during the boiloff period. This suggests that, if the outer surface temperature can be maintained above the air condensation temperature by a very small amount of insulation, a layer of frost will form and further contribute to the insulation effect. Such a system may be adequate for first-stage booster tanks, if, for example, only fuel losses during ground hold are the major concern and can be made up by fueling up to the point of launch. These relatively large heat influxes and associated high boiloff rates may not be practical, however, because of venting and liquid-level measurement problems associated with the violent turbulence of the liquid. Excessively large ullage volumes would also be required.

For the uninsulated tank the principal resistance to heat inflow is that of the boundary film on the inside of the tank between the wall and the bulk liquid. This represents a rather high rate of heat transfer to the liquid, so

that film boiling probably exists. It is of interest to compare the surface conductance obtained for an uninsulated tank with other experimental data on boiling heat transfer for liquid hydrogen. The data chosen for comparison (ref. 8) covered the three regimes of boiling, nucleate, transitional, and stable film. Figure 18 shows these boiling regimes as a function of heat influx and temperature drop across the inside wall and the bulk liquid. The two data points obtained in the uninsulated tank tests (condensing air and layer of frost) plotted in figure 18 show the tank data to be in the film boiling regime.

SUMMARY OF RESULTS

The principal results obtained from an experimental investigation to determine the feasibility under ground-hold conditions of three insulation systems applied to flight-weight propellant tanks representative of liquid-hydrogen fueled boost vehicles can be summarized as follows:

1. A tank insulated externally with sealed corkboard (density, 20 lb/cu ft; thickness, 1/4-in.) gave about the same overall apparent thermal conductivity as that predicted by thermal conductivity apparatus tests (0.24 to 0.26 (Btu)(in.)/(hr)(sq ft)($^{\circ}$R)).

2. A tank insulated externally with hermetically sealed polyurethane foam (density 2.5 lb/cu ft; thickness, 1/4-in.) performed well with mechanical evacuation of the foam to produce an apparent thermal conductivity of about 0.10 (Btu)(in.)/(hr)(sq ft)($^{\circ}$R) at a mean temperature of 235° R.

3. The method of hermetically sealing rigid polyurethane foam from air permeation by using a thin film laminate of aluminum foil and Mylar 0.0022 inch thick proved to be satisfactory and allowed a vacuum below 25 microns to be pumped within the sealed foam.

4. The low-density sealed foam constrictively wrapped around the tank walls with prestressed nylon strands provided a low insulation system total weight of 0.26 pound per square foot compared with the corkboard system weight of 0.53 pound per square foot.

5. Liquid nitrogen sprayed on the external surfaces of the sealed foam insulation provided a heat influx of only 30 Btu per hour per square foot compared with 156 Btu per hour per square foot for the sealed foam without the liquid nitrogen.

6. Boiloff rates from an uninsulated fuel tank showed a heat influx of 8120 Btu per hour per square foot with considerable liquifaction of air on the outside walls of the tank.

7. Under certain conditions and cooldown techniques, formation of liquid air on an uninsulated tank can be prevented by the natural accumulation of ice and frost, which reduced the measured heat influx by about 50 percent (to 3960 Btu/(hr)(sq ft)) compared with the liquefied air condition.

Lewis Research Center,
National Aeronautics and Space Administration,
Cleveland, Ohio, December 11, 1964.

REFERENCES

1. McGrew, Jay L.: A Comparative Study of Airborne Liquid-Hydrogen Tank Insulation. Advances in Cryogenic Eng., Vol. 8, K. D. Timmerhaus, ed., Plenum Press, Inc., 1963, pp. 387-392.

2. Driscol, D. C.: Cryogenic Tankage for Space Flight Applications. Advances in Cryogenic Eng., Vol. 5, K. D. Timmerhaus, ed., Plenum Press, Inc., 1960, pp. 95-102.

3. Gray, V. H., Gelder, T. F., Cochran, R. P., and Goodykoontz, J. H.: Bonded and Sealed External Insulations for Liquid-Hydrogen-Fueled Rocket Tank During Atmospheric Flight. NASA TN D-476, 1960.

4. Anon: Insulation for Liquid Oxygen Tanks. Rep. 5A229, NBS, Feb. 29, 1956.

5. Murphy, D. W., and Covington, D. T.: Saturn II Insulation Test. Data Rep. 1317-61-4, Martin-Denver Co., Aug. 8, 1961.

6. Haskins, J. F., and Hertz, J.: Thermal Conductivity of Plastic Foams from -423° F to 75° F. Advances in Cryogenic Eng., Vol. 7, K. D. Timmerhaus, ed., Plenum Press, Inc., 1962, pp. 353-359.

7. Schaechter, Wolfgang: Heat Transfer to Uninsulated Missile Tanks Containing Liquid Hydrogen. Paper 753A, SAE, 1963.

8. Mulford, Robert N., and Nigon, Joseph P.: Heat Exchange Between a Copper Surface and Liquid Hydrogen and Nitrogen. LA-1416, Los Alamos Sci. Lab., May 21, 1952.

2/22/85

"The aeronautical and space activities of the United States shall be conducted so as to contribute . . . to the expansion of human knowledge of phenomena in the atmosphere and space. The Administration shall provide for the widest practicable and appropriate dissemination of information concerning its activities and the results thereof."

—NATIONAL AERONAUTICS AND SPACE ACT OF 1958

NASA SCIENTIFIC AND TECHNICAL PUBLICATIONS

TECHNICAL REPORTS: Scientific and technical information considered important, complete, and a lasting contribution to existing knowledge.

TECHNICAL NOTES: Information less broad in scope but nevertheless of importance as a contribution to existing knowledge.

TECHNICAL MEMORANDUMS: Information receiving limited distribution because of preliminary data, security classification, or other reasons.

CONTRACTOR REPORTS: Technical information generated in connection with a NASA contract or grant and released under NASA auspices.

TECHNICAL TRANSLATIONS: Information published in a foreign language considered to merit NASA distribution in English.

TECHNICAL REPRINTS: Information derived from NASA activities and initially published in the form of journal articles.

SPECIAL PUBLICATIONS: Information derived from or of value to NASA activities but not necessarily reporting the results of individual NASA-programmed scientific efforts. Publications include conference proceedings, monographs, data compilations, handbooks, sourcebooks, and special bibliographies.

Details on the availability of these publications may be obtained from:

SCIENTIFIC AND TECHNICAL INFORMATION DIVISION

NATIONAL AERONAUTICS AND SPACE ADMINISTRATION

Washington, D.C. 20546